TOWN OF FITZWILLIAM
ZONING BOARD OF ADJUSTMENT
AGENDA

TUESDAY, JANUARY 9, 2018
7:00 PM

7:00 PM. Public Hearing. Catie Bisson application for a Special Exception to allow up to 30 students at her daycare facility, Little Learners Preschool and Daycare, from the previously allowed maximum of 12. The property is located in the Cranberry House at 27 Route 12 South, Tax Map 34, Lot 26 in the General Business District.

*****7:30 PM. Continued Public Hearing. Lon Caracappa application** for an Appeal from an Administrative Decision from the Board of Selectman denying an after-the-fact application for a Construction Permit at his easement at the Grasewicz property at Tax Map 24, Lot 1, in the Rural District.

******CARACAPPA HEARING CANCELLED 12/18/17******

The applicant requested to reschedule this continued hearing due to personal matters. This continued hearing is rescheduled for Tuesday, February 13, 2018 at 7:00 pm.

7:30 PM. Public Hearing. Claire Borowski application for a Variance to allow a shed and porch to exist on her property at 68 NH Route 119 West, Tax Map 32, Lot 9, in the Village and Residential Districts. Both structures would encroach within the district's setback requirements.

Administration:

Review Minutes
November 14, 2017
October 16, 2017
October 10, 2017

ZBA Application

DEADLINE TO SUBMIT AN APPLICATION FOR THIS MEETING DATE:
FRIDAY, DECEMBER 22, 2017

Received 12/5/17
To Sele & Board
Debbie Favereaux
12/07/17

Subject: Little Learners Daycare

From: Verdrager, Amelia (Amelia.Verdrager@dhhs.nh.gov)

To: nomerce2001@yahoo.com;

Date: Tuesday, December 5, 2017 12:49 PM

① Note: She told Ms. Verdrager that she was approved by Zoning Board in Nov
② She also stated she is no longer living on premises so it becomes a Center Based Daycare Business
CA Rocheleau

Hello Carol Ann,

Here is the follow up on our conversation regarding Little Learners Daycare.

With the additional measurements of three small rooms, the child care center is now approved for 34 children (40 square feet per child-indoor measurements).

The only stipulations that we have regarding going as high as 34 children is that the program is staffed properly at all times. Of course this is a licensing requirement regardless! This staffing number is based upon the age and group size of the children that she intends to care for. I also took time to check the number of children that she is approved to have on the current playground. At this time the center can have 28 children on the current playground. The center director has inquired about a space in the back of the building for an additional playground area. My observations were that they would need to simply fence the back of that space (as they currently have side fencing), and enclose the heat equipment by fencing just preventing access by the children.

All in all, she has the required approvals to function for us.

Thank you for sharing your concerns, I hope I have helped ease them. My hope is that this helps assist families in this area in finding quality care.

Please feel free to reach out to me directly should any questions arise.

Thank you.

Amelia E. Verdrager

Licensing Coordinator

Child Care Licensing Unit

Department of Health and Human Services

129 Pleasant Street

Concord, NH 03301

(603)573-0531- Direct

(603)271-9025- Main Office

www.dhhs.nh.gov/oos.cclu

Please note: If you have a general question or need an answer right away, please contact the main office at 1-800-852-3345 ext. 9025 (NH only) or 603-271-9025 and ask for the licensing coordinator on duty. Emails are checked once per day and responded to on a priority basis.

STATEMENT OF CONFIDENTIALITY: This message may contain information that is privileged and confidential and is intended for the exclusive use of the individual(s) to whom it is addressed. If you received this message in error, please contact the sender immediately and delete this electronic message and any attachments from your system. -
New Hampshire Department of Health and Human Services

PICTURE

OWNER

CCCP, LLC

PO BOX 861

KEENE, NH 03431

TAXABLE DISTRICTS

District	Percentage
VILLAGE WATER	% 100

PERMITS

Date	Permit ID	Permit Type	Notes
06/07/12	12-25	ALTERATION	RESTAURANT EXPANSIOI

BUILDING DETAIL

[redacted]

Roof: **GABLE OR HIP/ASPHALT**
Ext: **VINYL SIDING**
Int: **PLYWOOD PANEL/DRYWALL**
Floor: **CARPET/HARDWOOD**
Heat: **GAS/FA DUCTED**
Bedrooms: **2** Baths: **1.5** Fixtures: **5**
Extra Kitchens: Fireplaces:
A/C: **No** Generators:
Quality: **A0 AVG**
Com. Wall:
Size Adj: **0.9344** Base Rate: **RSA 73.00**
Bldg. Rate: **0.8970**
Sq. Foot Cost: **$ 65.48**

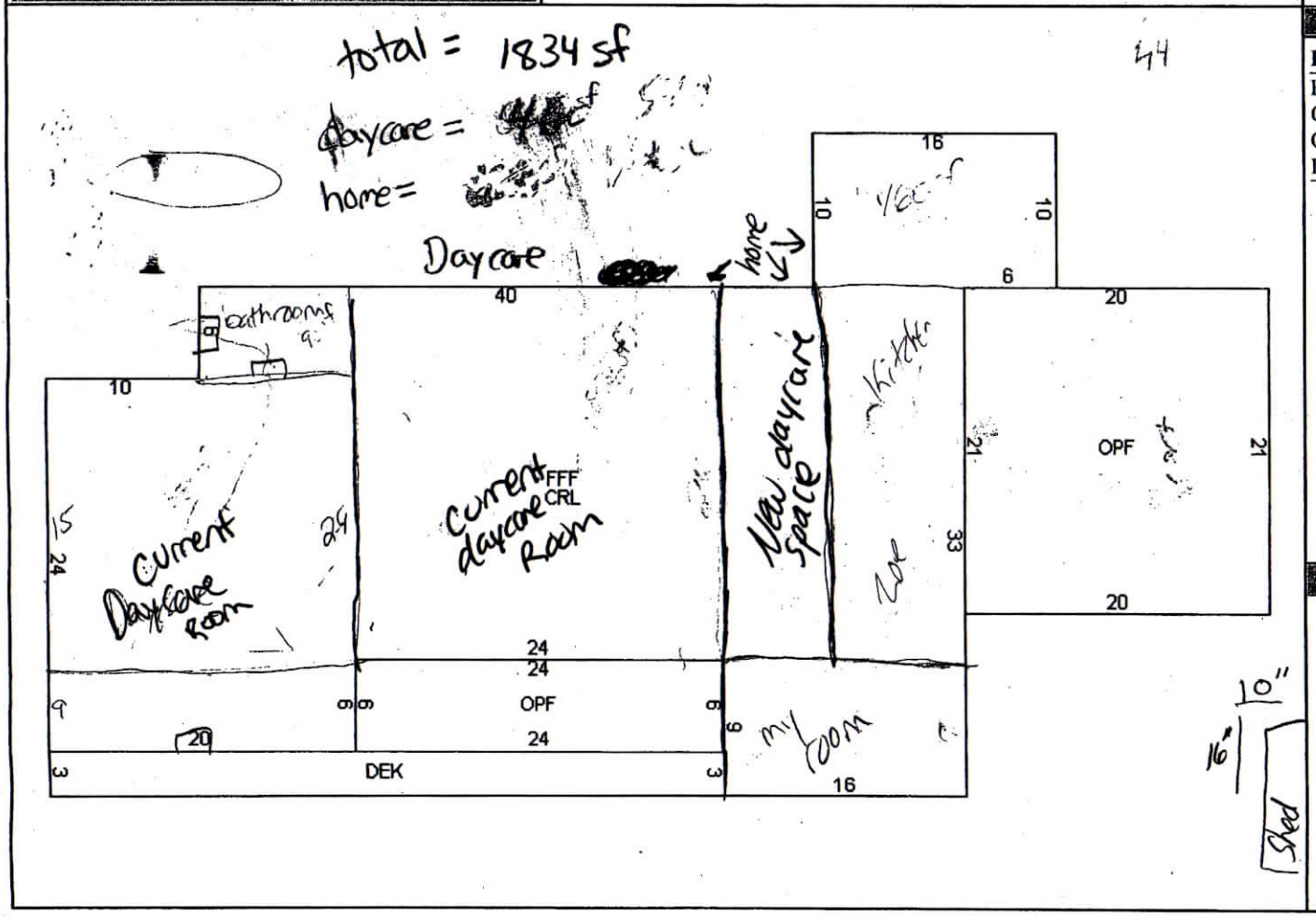

BUILDING SUB-AREA DETAILS

ID	Description	Area	Adj.	Effect.
FFF	FST FLR FIN	1804	1.00	1804
CRL	CRAWL SPACE	1804	0.05	90
OPF	OPEN PORCH	564	0.25	141
DEK	DECK/ENTRANCE	132	0.10	13
		4,304		2,048

2012 BASE YEAR BUILDING VALUATION

Market Cost New:		$ 134,103
Year Built:		1961
Condition For Age:	GOOD	14 %
Physical:		
Functional:		
Economic:		
Temporary:		
Total Depreciation:		14 %
Building Value:		$ 115,300

OWNER INFORMATION

CCCP, LLC

PO BOX 861

KEENE, NH 03431

SALES HISTORY

Date	Book	Page	Type	Price	Grantor
10/23/2009	2604	685	U I 18	472,000	RETTIG PROPERTY
12/03/2004	2200	764	U I 18	190,000	JAMES H KENNEDY

PICTURE

LISTING HISTORY

02/06/14	ADPR	
03/14/13	ADPR	
08/06/09	SGVL	
01/27/09	INSP	MARKED FOR INSPECTION
04/28/07	DK M	
08/15/05	PP L	

NOTES

RED; PAT IS MIN FRAMED; 8/09 VIEWED STORE, APARTMENT TENANT GAVE INFO AT DOR, APT HAS 2 BEDROOMS; 2/14 APPRS STORE NO LONGER OPERATIONAL & [redacted] EST NO PLANS TO EXPAND=REMOVE FLAG;

EXTRA FEATURES VALUATION

Feature Type	Units	Lngth x Width	Size Adj	Rate	Cond	Market Value	Notes
PAVING	4,592	82 x 56	63	3.25	30	2,821	
FIREPLACE 1-STAND	1		100	3,000.00	50	1,500	
SHED-WOOD	160	10 x 16	160	7.00	100	1,792	
						6,100	

OFFICIAL SOFTWARE BY AVITAR

FITZWILLIAM ASSESSING OFFICE

PARCEL TOTAL TAXABLE VALUE

Year	Building	Features	Land
2012	$ 125,600	$ 4,300	$ 60,000
		Parcel Total:	$ 189,900
2013	$ 125,600	$ 6,100	$ 60,000
		Parcel Total:	$ 191,700
2014	**$ 115,300**	**$ 6,100**	**$ 60,000**
		Parcel Total:	**$ 181,400**

LAND VALUATION

Zone: GB GENERAL BUSINES **Minimum Acreage:** 0.92 **Minimum Frontage:** 200 **Site:** AVERAGE **Driveway:** PAVED **Road:** PAVED

Land Type	Units	Base Rate	NC	Adj	Site	Road	DWay	Topography	Cond	Ad Valorem	SPI	R	Tax Value	Notes
1F RES	0.920 ac	40,000	E	100	100	100	100	100 – MILD	150	60,000	0	N	60,000	
	0.920 ac									60,000			**60,000**	

- dimensions whole house
- dimensions daycare

total: spent

rent:

mileage for year: business personal

876-5041 linda

friday

APPROVED
Zoning Board of Adjustment
Meeting Minutes
March 24, 2015

Members: Steve Filipi, Gretchen Wittenborg, Bob Handy, Jack Ernst, and Carmen Yon, alternate, seated for Cathy Davis
Others Present: Nancy Carney in for Chris Holman, as selectmen's representative
CTO: 7:03 PM.

Filipi moved to seat Carmen Yon for Cathy Davis, seconded by Wittenborg, approved by the Board.

7:00 PM Public hearing. Catie Caisse, Little Learners Preschool and Daycare, application under Section 127-10 F. for a special exception to expand their capacity to more than 6 children at any one time, on property located at 27 Route 12 South, Map 34, Lot 26, General Business District.

Ms. Caisse told the Board she is currently licensed by the State for 6 day care children plus 3 after school children. She wants to expand that number to 12 day care children plus 5 after school children.

Handy asked about the size of the space. Ms. Caisse and her husband and daughter live in the existing apartment. Ms. Caisse will use both front rooms for daycare/after school use, but will not be expanding the footprint of the building. The building is 1700sf total, with 1000sf dedicated as daycare/after school space. There is a bathroom in the daycare space and in the apartment space. The State licensing officer inspected the site, measured it and approved the expansion plan. The Fire Chief inspected the site and noted the need for one more exit sign, which she has installed. The Fire Chief has signed off on the license. The Health Officer conducted an inspection and signed off on it as well. Ms. Caisse noted that she and her husband passed their background checks for the license.

Wittenborg asked who owned the building. The owner is CCCP,LLC, by Andre Snegich.

Ms.Caisse has been the only staff person, but now there is a new staff person, allowing the expansion to 12+5 children. There will be two certified teachers and the new staff person has passed her background check too.

Filipi noted that the Town will need a copy of the new license for the file. Carney noted the Fire Department has a copy of the state license, as does the Health officer.

Wittenborg read RSA 672:1, V-a, which supports daycare. The care of pre-school and school children in the home of a child care provider makes a vital and significant contribution to the State's economy and the well-being of New Hampshire families…Family based care should not be discouraged or eliminated by use of municipal planning and zoning.

APPROVED
Zoning Board of Adjustment
Meeting Minutes
March 24, 2015

Yon asked if there needed to be site plan review for parking issues. The Planning Board met with Ms. Caisse and decided that the proposal did not warrant a site plan review. Cars enter and exit to drop-off and pick-up children.

Wittenborg moved, Filipi seconded, and the Board voted to close the public hearing to deliberate on the mandatory findings:

1. The Board agreed the proposal is in harmony with the purpose and intent of the zoning, especially in light of the state RSA.
2. The Board agreed the proposal is not detrimental or injurious to the neighborhood, adding that this is a good location for this use.
3. The Board found the proposal is appropriate for the site.
4. The Board found the proposal complies with all applicable requirements, especially since the State inspects and licenses the business.

Filipi moved, Ernst seconded and the Board approved the Special Exception without conditions.

Wittenborg moved, Filipi seconded and the Board approved the 11/18/14 minutes as corrected (f changed to s).

Filipi moved, Yon seconded and the Board voted to adjourn the meeting at 6:40 PM.

APPROVED
Town of Fitzwilliam
Planning Board Meeting
July 1, 2014

Members Present: Terry Silverman, Robin Blais, Carlotta Pini, Tom Parker, Nancy Carnie, Selectmen's rep.
Call to Order: 7:05 PM

7:00 PM Public Hearing. Catie Caisse application to open a new family day care center at the Crossroads, Cranberry House, 27 NH Route 12 S, Map 34, Lot 26, General Business District.

Silverman reviewed the application and declared it complete. The Board reviewed the sketches of the indoor floor plan and exterior plan.

Blais asked how many children she planned to have in the day care center. Ms. Caisse said six would be the maximum. Carney said she had inspected the facility as Fire Chief, and there were a couple of things to be fixed, including smoke detectors in the apartment and day care rooms. Ms. Caisse will engage an electrician to make the repairs and will call Chief Carney for a final inspection when they are completed.

Beth Tatro, the Health Officer conducted an inspection and signed off on the center.

Parker asked if the Board needed a letter from the property owner that he is OK with the plan. Silverman said that is not the Board's concern. Ms. Caisse said Andre knows about the plan and she has a one year lease on the property, with the option to buy. She noted that Andre Snegatch still owns the Cranberry house, but had sold the Crossroads to Ed Yoeger.

Asked if she has applied for the state license, Ms. Caisse said she can't until the various inspections were completed. She added that the State had 120 days to issue the license after they receive the application. When she receives the license, she will bring a copy of the Fire and Health inspections, and the lease along with the license for her file in the Land Use Office.

The outdoor play area is in the back of the center, in a grassy area between a stone wall and the building itself. The existing parking lot lights are sufficient. Ms. Caisse asked how to indicate the entrance and exit directions for safety of drop off and pick up of children. The Board suggested arrows and instruction to participating parents.

Ms. Caisse has a sign permit and the sign is installed. Pini said the plan seemed well thought out and safe. Blais moved, Silverman seconded and the Board approved the site plan application to open a day care center at the Crossroads, Cranberry House, 27 NH Route 12 S, Map 34, Lot 26, General Business District.

The Board reviewed minutes of the June 17, 2014 meeting. Blais moved, Pini seconded and the Board approved the minutes as written.

The Board reviewed minutes of the June 24, 2014 meeting. Pini moved, Blais seconded and the Board approved the minutes as written.

Blais inquired if it was appropriate ask for a short brief of the pre-application meeting at DRED attended by Silverman on June 26, 2014. Silverman said it was. He said his impression was that the project was tailored by the property owner to stay under the thresholds for a12-E permit and an Alteration of Terrain permit. He said

he had personal questions about this action being within the spirit of the law. He said Ridge Mauck indicated DES did not like incremental expansion.

Silverman said he reported the concerns of residents and gave Mr. Carpenter several letters including one from Pini. He added that his biggest problem with 12-E is the lack of input from the town.

He said draft minutes of the meeting had been sent to Mr. Carpenter for review by the state representatives at the meeting. Pini asked if the project is under the 12-E and AoT thresholds, can the town monitor. Silverman said no. Pini said in that case, she'd like to see third party oversight.

Parker asked who will monitor the project. Silverman said he is concerned about the transition from Collins Pond Road onto NH Route 119.

Silverman reported that Mr. Vaal discussed logging the property. Carney said his intent to cut application had been returned to him as incomplete; the number of acres to be logged and the total number of acres information was missing. She added he planned to bring the logging trucks out through his easement onto Church Street. The Selectmen plan to have the town's forester check the property when the application is returned.

Silverman reported he had seen Mr. Vaal talking with a surveyor today; it was Paul Grasewicz.

It being 7:30 PM, with another appointment to see, Silverman suggested the Board come back to this topic following the next case.

7:30 PM Preliminary consultation. David Tighe to discuss opening a B&B at 72 Robbins Road, Map 15, Lot 9, Residential and Historic Districts.
Mr. Tighe showed a photograph of his home at 72 Robbins Road from the 1940s, noting that when he bought it is was in very bad shape. He renovated it and now it looks much like it does in the photograph. There are five bedrooms in the house with 4 upstairs and one downstairs. The septic is approved for a five bedroom house. The septic system is a concrete tank with a pipe and stone leach field. The house has a well; it is not on the Village Water system.

Silverman noted a B&B is an allowed use in the Residential District under section 127-11F in the zoning ordinance. He asked Carney about fire regulations. She responded that she and Ed Mattson will review the rules, including requirements for sprinkler systems, and will inspect the property prior to issuing a report for the Board. Carney asked about the capacity expected and Mr. Tighe felt that 10 might be the maximum.

Mr. Tighe said he and Mrs. Tighe plan to move to a suite on the third floor of the Inn for personal use, in the winter to leave the house free for guests. Breakfast would probably be prepared at the Inn and taken to the house. He added that they have two licenses, one for the kitchen at the Inn and a catering license as well.

Pini asked about neighbors. Mr. Tighe said there are no neighbors within sight of the house. He described the locations of the various houses in the neighborhood.

Mr. Tighe told the Board they need a place to accommodate larger groups, like family reunions and wedding

Town of Fitzwilliam * Board of Adjustment
Variance Application

Name of Applicant (please print) Ross Tourigny

APPLICATION FOR A VARIANCE

A variance is one which grants relief from the Fitzwilliam zoning ordinance. A variance may be granted under special circumstances provided you show that your proposed use is not contrary to the spirit of the Fitzwilliam Land Usage Bylaws and meets specific criteria. Before you apply for a variance, you must first have some form of official determination that your proposed use is not permitted without a variance. Please attach a copy of the determination.

I request a Variance from Article /27 Section 17 of the Zoning Ordinance to permit:

(1) 10' x 12 SHED SEE PLAN

(2) 4' x 24'-6" Porch SEE PLAN

Facts in support of granting the variance:

1.) Granting the variance would not be contrary to the **public interest**.

2.) Granting the variance will be in keeping with the **spirit of the ordinance**.

Board of Adjustment * * PO Box 725 * Fitzwilliam, NH 03447 * 603/585-9119 * fitzlanduse@wivalley.net

Town of Fitzwilliam * Board of Adjustment
Variance Application

Name of Applicant (please print) CLAIRE BOROWSKI
ROBS TOURIGNY

3.) Granting the variance would do **substantial justice**.

4.) Granting the variance will not diminish surrounding **property values**.

5.) Unnecessary hardship

a. Describe **special conditions** of the property that distinguish it from other properties in the area.

b. The proposed use is reasonable because…

Attach diagram showing boundaries, setbacks, frontage, dimensions, etc. of property.
Attach sketch, plot plan, pictures, construction plans, etc. of what you propose to do.

Applicant signature _____ **Date** _____

Claire Borowski

Board of Adjustment * * PO Box 725 * Fitzwilliam, NH 03447 * 603/585-9119 * fitzlanduse@wivalley.net

Please see Back of Plot plan

SHED will not meet Setbacks Anyware on Lot. Shed will Be Built on SKIDS non permanent

2. Porch is primarily for Safty purpose. Roof is slate & Snow + ICE is a HAZARD for the 2 Rental units

Shed - 2' to property line
porch 5' to property line

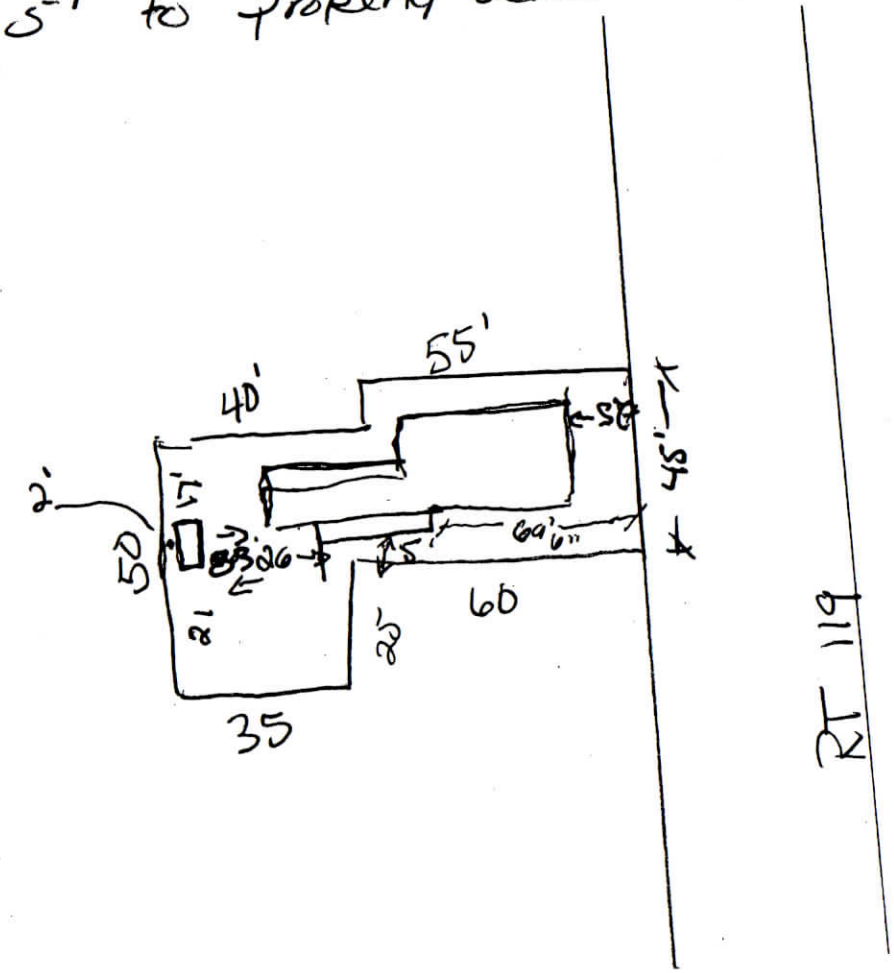

*filled out building permit but did not submit -DM

...cription of Proposed Work

...otal estimated cost of proposed work: $ 2,000. - 2500 ?

If alteration, are the areas currently occupied or vacant? _____

Description of proposed work: Be specific, attach additional sheets as needed. Application must contain information to determine compliance with appropriate ordinances, regulation and law. Include location and specify size and dimension of each building, room, shed, pool, etc. **Scaled plans are required for all buildings, structures, and dwellings, as well as any remodeling or additions**

* GARDEN SHED / WHITE FRONT (FACING STREET) NATURA SIDES & BACK

* 4'x24' SIDE PORCH

If change of use, please describe existing and proposed use:

_____

Proposed Setbacks: * SHED 83' PORCH Front 30' Rear 25' 2' Left Side 5' 2' Right Side 17'

Will the proposed building violate any building setback for the zoning district?	☐ Yes	☒ No
Will the proposed building be in the Shoreland Conservation District?	☐ Yes	☒ No
Will the proposed building be in the Wetland Protection District/Prime Wetland?	☐ Yes	☒ No
Will the proposed building require a new or modified Town driveway entrance?	☐ Yes	☒ No
Will the proposed building require a new or modified State driveway entrance?	☐ Yes	☒ No
Will the proposed building require a new private water well?	☐ Yes	☒ No
Will the proposed building have a new geo-thermal heating/cooling system?	☐ Yes	☒ No
Will the proposed building require a new/modified private septic system design?	☐ Yes	☒ No
Will the proposed building require a new or modified State E911 address?	☐ Yes	☒ No

Applicant Affidavit

I hereby certify that the information provided is true and correct to the best of my knowledge. No changes to the information provided shall be made without approval of the Board of Selectmen. I further grant the Board of Selectmen the right to enter the premises or buildings at reasonable times during the plan review process and inspections of the project during the construction phase. Construction activities will not start until the Building Permit has been issued.

I acknowledge that all work will be performed in accordance with the Town of Fitzwilliam Zoning Ordinance and the State of New Hampshire Building Code, and that the building will not be occupied or utilized until a Certificate of Occupancy has been issued.

Please indicate that you are the owner or authorized agent:

☒ I am the owner of the property ☐ I am the authorized agent

Claire Borowski — *Signature of Applicant*

CLAIRE BOROWSKI — *Print Name*

8/30/17 — *Date*

24'-6"

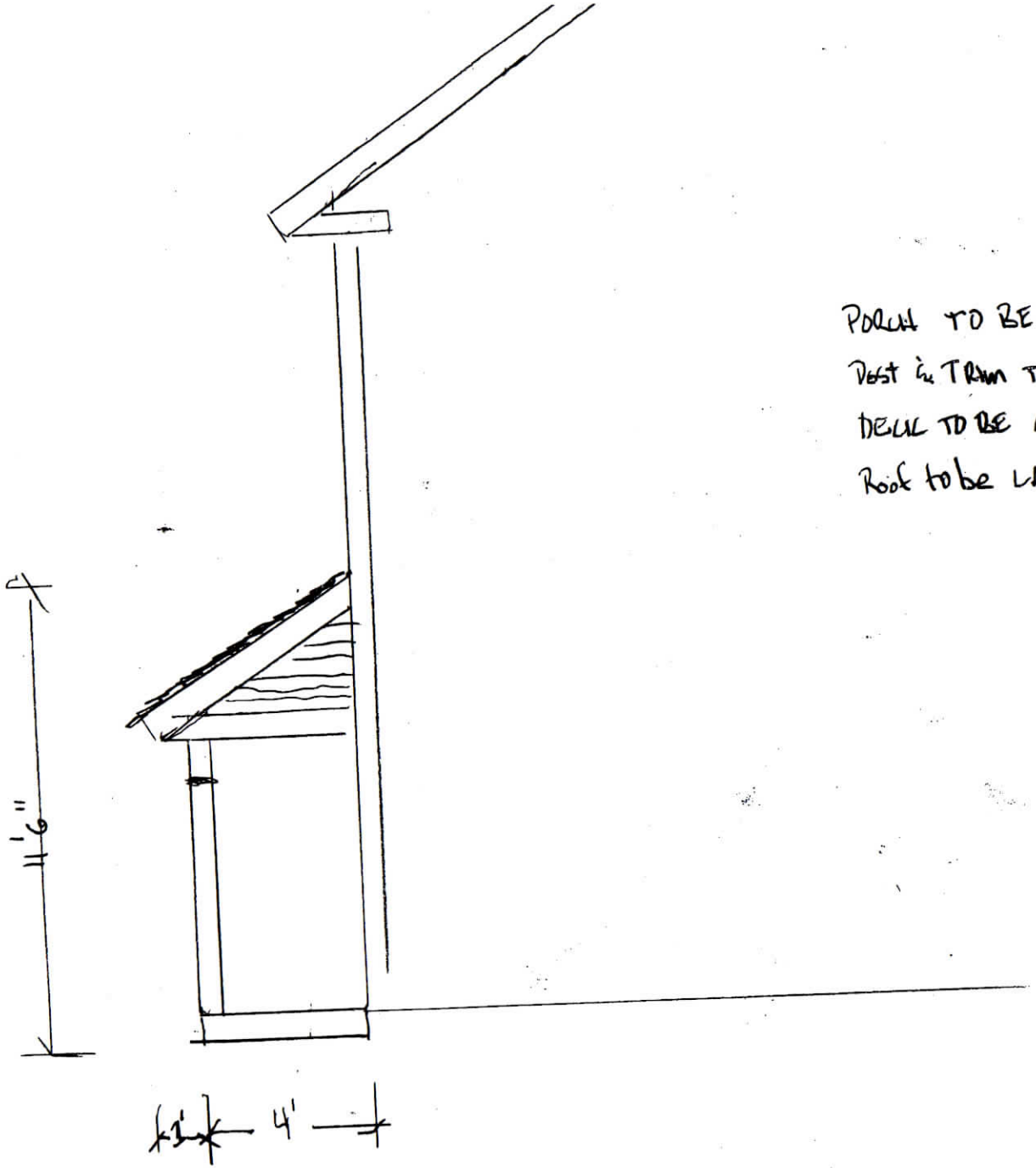

PORCH TO BE 4' x 24'-6"
POST & TRIM TO BE PAINTED WHITE
DECK TO BE GREY COMPOSITE
Roof to be LAMINATED SHINGLES

NOTES
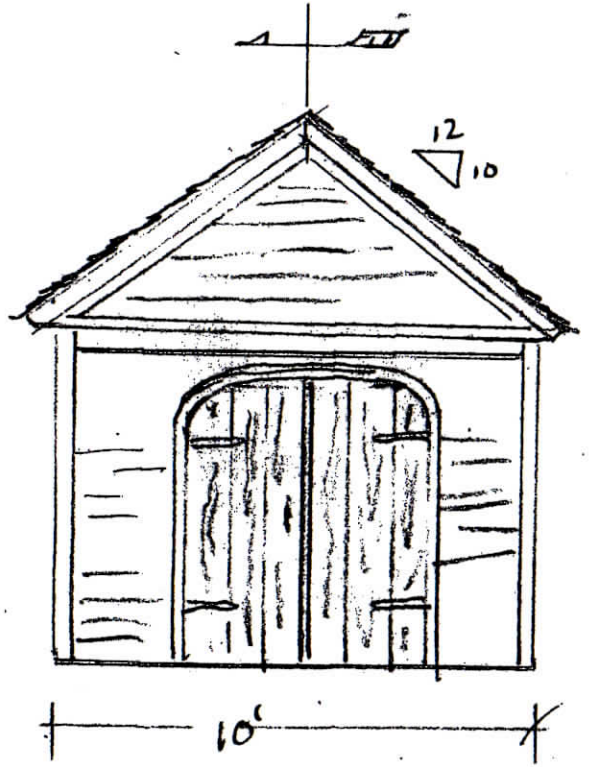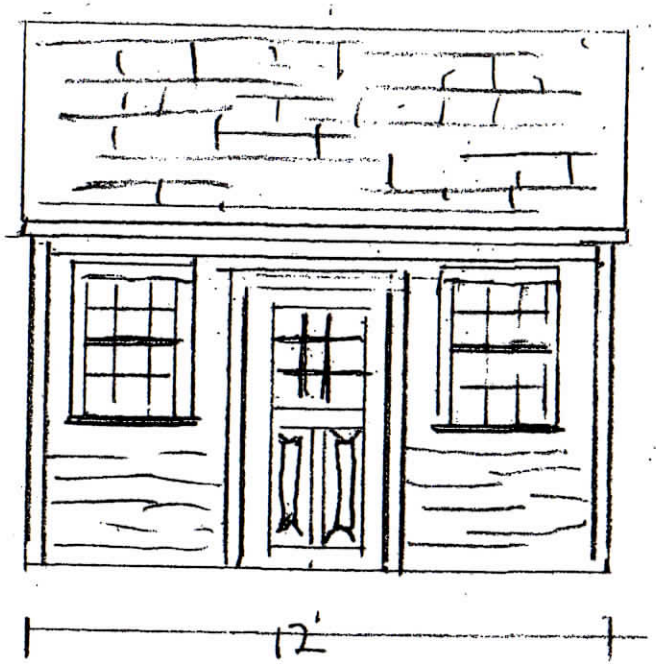
* SCALE ¼" = 1'
* 10X12 SHED
* Roofing laminated SHINGLE
* FRONT of SHED TO BE CLAPBOARDS
* ALL OTHER SIDES TO BE 12" SHIPLAP
* SHED IS NON PERMENANT